Cert. No. FM61782

Eswari

Excellence in Protection

Eswari Electricals Pvt. Ltd.

,

,

United Kingdom

Eswari Lanka (Pvt.) Ltd.

Eswari (U.K) Pvt. Ltd.

CAT No.: EE/CAT/09/00

Eswari

Excellence in Protection

AMP-SYS 04

Air Insulated Ring Main Unit

Excellence

in Protection

The Company

ESWARI Electricals was established in the year 1983 for the manufacturing of High Voltage Switchgear products. The company was founded by Mr. N. Ganesan who had a long experience as a Deputy Director in the Bureau of Indian Standards.

Continuous Research and Development lead the company into manufacturing Medium Voltage Switchgear products like Isolators, Load Break Switches, Ring Main Units, Vacuum Circuit Breakers, SF6 Breakers and Unitized Secondary Substation etc.

We offer **Complete Protection Solution** to Power & Distribution Network Systems.

Quality Policy

ESWARI an ISO 9001-2000 Certified company with an objective to ensure guarantee to all its products confirming to the utmost quality requisites. Our policy is to offer protection solution for power distribution through innovative and indigenously designed, technically superior state-of-the-art products.

We, at EEPL, shall endeavor for total customer satisfaction through our integrity and consistency in quality of products and services at a competitive price

Our People

At ESWARI, we as a team, work towards continuous development and prosperity of the company. The primary objective of one and all is towards best of the performance and striving to achieve

excellence...

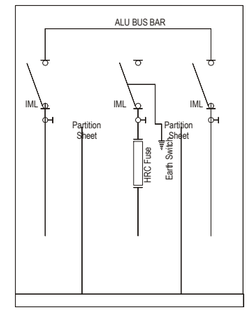

Scheme Ref:
3W (2L + 1SF)

Description :
3 Panel Ring Main Unit comprising of
2 LBS with 1 SFU

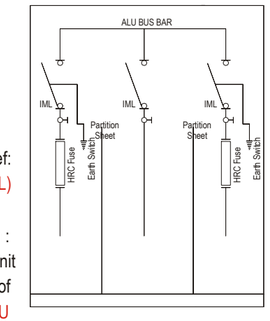

Scheme Ref:
3W (2SF + 1L)

Description :
3 Panel Ring Main Unit comprising of
1 LBS with 2 SFU

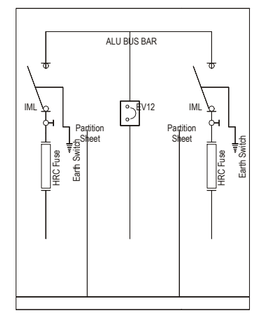

Scheme Ref:
3W (2SF + 1B)

Description :
3 Panel Ring Main Unit comprising of
1 Breaker with 2 SFU

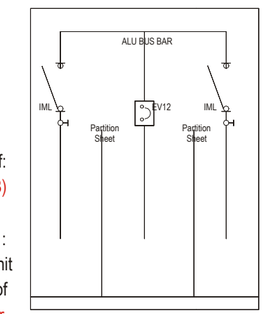

Scheme Ref:
3W (2L + 1B)

Description :
3 Panel Ring Main Unit comprising of
2 LBS with 1 Breaker

Ordering Information Details	
W	Way - No. of Panel Units
L	Load Break Switch Unit
SF	Switch Fuse Unit
B	Vacuum Circuit Breaker Unit

Example :

3W (2L + 1SF)

3W - 3 Way - 3 Panel Ring Main Unit
1B - Breaker as Incomer
1SF - Switch Fuse Unit as Transformer Outgoing
1L - Load Break Switch as Feeder Outgoing

Extensibility

AmpSys-04 series can be Extensible without any limitation in both direction at site also

Ring Main Unit

The Air insulated RMU which comprising of either
Multiple combination of LBS or Combination of LBS & VCB
These RMU primarily used in the secondary distribution network & cable charging.

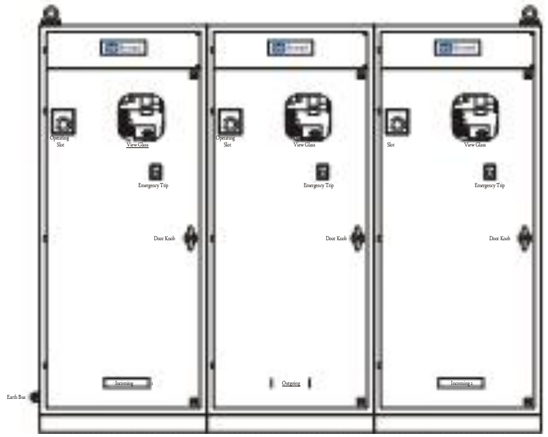

Combination of LBS

The most commonly used Air insulated Ring Main Unit combination for which the load is comparatively smaller and the transformer rating of upto 630 kVA. It is also possible for multiple combination of LBS as per customer's requirement

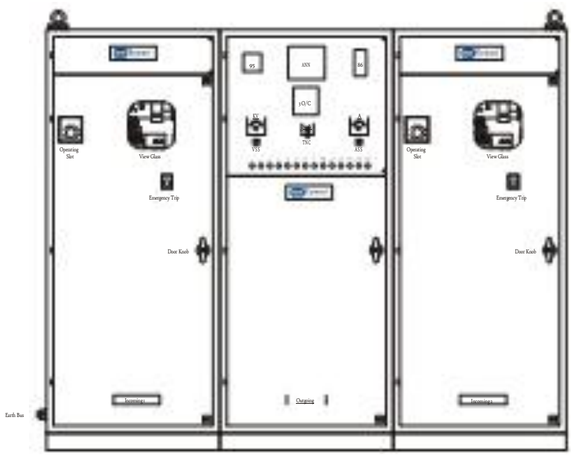

Combination of LBS & VCB

The combination of RMU comprising of 2 LBS & 1 VCB as a feeder shall be used for transformer switching application of rating above 630 kVA.

IML - 04 Switch Series

Principle Operation

The load break switch works on the principle of extinguishing the arc by a compressed air, produced by switch, itself, while opening. During the switching-off operation, the arcing contact maintains continuity while the main contact travels along with the piston attached with it, compressing the air in the pressure cylinder. After a predetermined length of travel, the arcing contact opens striking an arc. At the same time, a blast of compressed air, extinguishes the arc, through the nozzle surrounding the arcing contact. All switches are equipped with toggle spring mechanism, to ensure a high closing and opening speed, irrespective of the operator's skill.

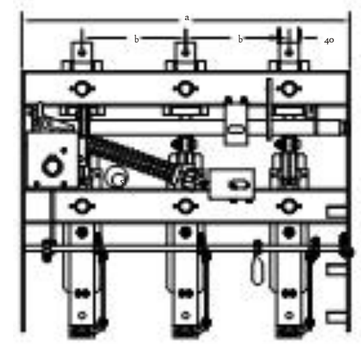

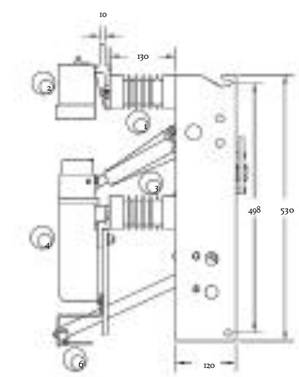

1. Insulator
2. Top contact with nylon cup
3. Moving Arm & Moving Arm insert
4. Bottom contact with nylon cup
5. Main Spring
6. Fuse trip clamp

Dimensions

(in mm)

Model	a	b
Standard - 12 kV	665	210
Compact - 12 kV	485	170
Standard - 24 kV	?	?

Salient Features

- Reliable arc quenching
- Simple, yet robust mechanism
- Compact dimension and sliding contacts
- No swing of moving arm-saves valuable panel space
- Best engineering plastics used, to ensure better electrical and mechanical properties
- Maintenance free long service life
- Highest degree of personal safety

Optional Features

- Earth switch with mechanical interlock
- Auxiliary contacts
- Shunt trip coil 110 V (or) 220V AC/DC can be fitted on switches

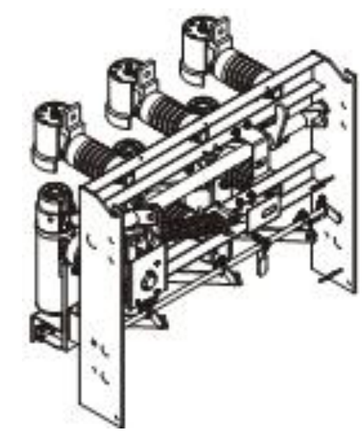

AmpSys - 04 Panel Series

AmpSys-04 series Switch Board are of standardized, modular & compact and are ideally suited for switching applications to fullfill in the Medium voltage distribution system with atmost safety and reliability.

It has compartmentalized setup and Flush mounted operating mechanism and mechanical interlocks to ensure the complete safety of personal.

Salient Features

- Highest degree of personal safety
- Complete switching device for distribution
- Convenient operation
- Easy Cable connection
- Excellent breaking performance
- Maintenance free long service life
- Unlimited extensibility on either side
- Compact and totally compartmentalized construction

Applications

AmpSys-04 series is suitable for switching application in electrical distribution networks for control and protection of power equipment in the network such as

- Transformers switching
- Distribution Substation
- Ring Main Units
- Cables and overhead lines charging etc.

General Arrangement Drawing

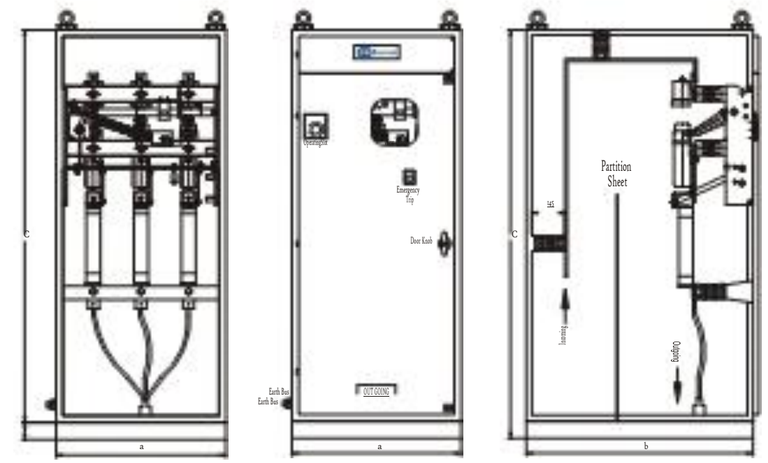

Specifications

Applicable Standards	IEC 60265 & 60694 IS 9920 & 3427
Type of Installation	Metal Clad Construction Indoor / Outdoor
Type of Protection	IP 2x between Compartments IP 4x Externally - Indoor IP 5x Externally - Outdoor
Phase to Phase Clearance	130 mm (min)
Phase to Earth Clearance Bus	90 mm (min)
Bar Rating	Upto 630 A
Incoming Cable Entry	Rear Bottom
Outgoing Cable Entry	Front Bottom

Schematic Arrangement

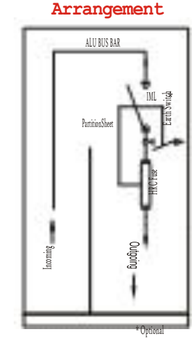

Dimensions

(in mm)

Model	a	b	c
Standard - 12 kV	750	1000	1740
Compact - 12 kV	570	750	1500
Standard - 24 kV	825	1200	2100

Technical Data

Rated Voltage (kV)	Rated Insulation level (kV)	Rated lightning impulse withstand voltage (kVp)		Rated 1 min power frequency withstand voltage (kV)		In (A)	I1 (A)	I2 (A)	I3 (A)	I6 (A)	Ima (kA)	Idyn (kA)	Ith 3 sec (kA)
		Across isolating distance	To earth and between poles	Across isolating distance	To earth and between poles								
12	28/75	75	125	35	28	630	630	630	16	25	65	65	26.3
24	50/125	85	145	75	50	630	630	630	16	25	65	65	26.3

In - rated current
I1 - rated mainly active load breaking capacity
I2 - rated closed loop breaking capacity
I3 - rated transformer off-load breaking capacity
Ima - rated short-circuit making capacity
Idyn - rated peak withstand current
Ith - rated short-time current