Cert. No. FM61782

Eswari

Excellence in Protection

Eswari Electricals Pvt. Ltd.

Eswari Lanka (Pvt.) Ltd.

Eswari (U.K) Pvt. Ltd.

CAT No.:

EE/CAT/09/00

e-BUS Intertacer

Eswari

Excellence in Protection

USS-12

Unitized Secondary Substation

Unitized Secondary Substation

USS is a prefabricated secondary substation with the combination of Medium Voltage Switchgear, Low Voltage Switchgear, Distribution Transformer and associated components of Metering and protection requirements and all fitted in one compact unit in accordance to the standards.

The USS is compartmentalized into three divisions namely Medium Voltage Switchgear compartment, Low Voltage Switchgear compartment and Distribution Transformer compartment.

Special Features

- All weather proof enclosure.
- Resistance to outside temperature and humidity
- High level of personal safety & protection
- High load breaking capacity at low weight and reduced overall plant and operating costs
- Absolute water & vapour and temperature barriers
- High durability & very low maintenance cost
- Highly fire retardant
- Can be installed very quickly & very convenient

Applicable Standards

USS is designed and tested in accordance with IEC 61330 and also with individual standards of equipments like IEC 60265, IEC 60298, IEC 60694 IEC 60439 & IEC 60076

DESIGN & CONSTRUCTION

ESWARI's USS is an unique innovative modular design and construction.

The modular design provides easy detachability of walls, doors, ceilings and roofs, however complying to IP 5X Standards.

The Enclosure is made of Special Insulating material called **PUF (Poly-Urethene Foam)** sandwiched between two Pre-coated GI sheets . This offers excellent insulating properties for both electrical and thermal factor. All the wall and door panels are provided with a Special tongue and groove construction to enable a CAM-Lock fastening system.

Dimensions

(in mm)

Description	W	L	H
Upto 400 kVA	1500	2400	2000
400 kVA - 630 kVA	1500	2600	2100
630 kVA - 1000 kVA	1800	2800	2300

Equipment Combination

Generally the USS is divided into three compartments and they are

i) Medium voltage switchgear compartment

Medium voltage switchgear can be of either one of the following

- Ring Main Unit (SF6 Gas insulated / vacuum type)
- Load Break Switches / Switch Fuse disconnectors.

ii) Low voltage switchgear compartment

Low voltage switchgear can be in accordance with standards as well as individual requirements.

Generally, it includes the combination of Air Circuit Breaker, MCCB, MCB and Switch Fuse disconnectors.

iii) Distribution Transformers

The transformer can be of either one of the following

- Oil cooled with conservator
- Oil cooled with hermetically sealed
- Cast Resin / Cast impregnated type

And the rating of the transformer depends upon the customer requirement upto 1000 kVA.

Schematic Diagram

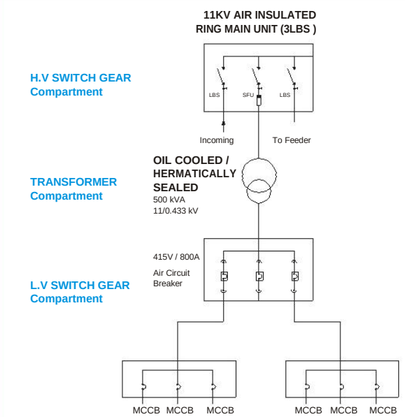

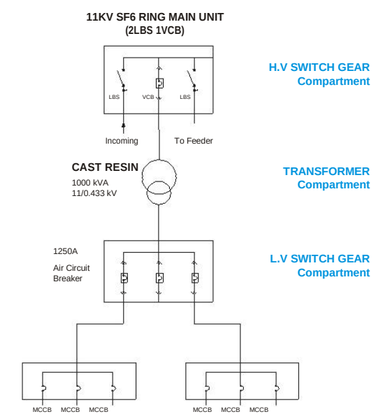

e-BUS Interfacer TM

e-BUS Interfacer is an innovative device of ESWARI to offer a low cost SCADA / Automation Solution. The interfacing device enable the user to control and acquire data from the USS. The Switchgear ON & OFF operation can be remotely controlled through GSM / Internet.
The data such as Current, Voltage, Power, Frequency can also be obtained remotely through this interfacing device.